FUEL TANK ASSEMBLY

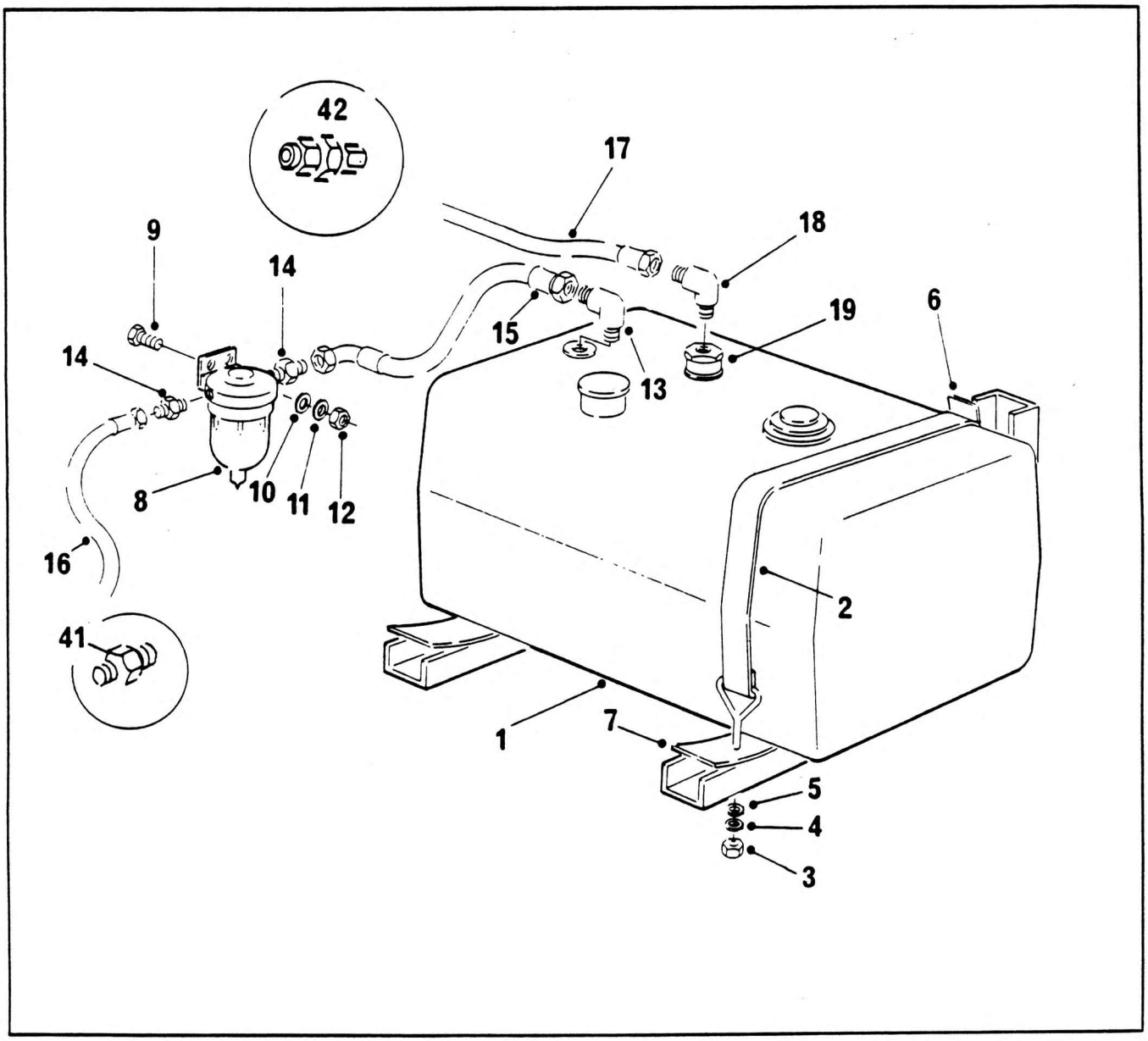

NO.	PART NO.	QTY.	DESCRIPTION
1 +	6-880-990293	1	Fuel Tank Sub Assy
2	2-850-995000	2	Strap Weld
3	7-661-190003	2	Nut M10
4	7-951-190210	2	Lockwasher 10mm
5	6-949-995003	2	Tapered Washer
6	4-814-990018	2	Protection Pad
7	4-814-990019	2	Protection Pad
8	7-437-990012	1	Sedimenter
9	7-126-171353	2	Screw
10	7-951-170210	2	Spring Washer Dia.8
11	7-951-170014	2	Wsaher M8 Steel
12	7-661-170003	2	Nut 8mm x 1.25
13	7-445-060820	1	Elbow Male
14	7-445-060543	2	Male Connector 'O' Ring
15	7-550-202511	1	⅜" Hose Assy
16	7-550-211211	1	⅜" Hose Assy
17	7-913-107251	1	Tube Assy ¼" x 72" Long
18	7-446-040461	1	Elbow ¼" x ¼"
19	7-445-080450	1	Reducer ½" to ¼"
41	7-445-060419	1	Male Connector
42	8908456	1	Coupling Straight

+ See further breakdown in this group

6-880-990292
Issue No. 02